eMOTUS5PB

SURFACE MOUNT CABINETS

Powered Loudspeakers - Stereo kit

PRODUCT OVERVIEW

eMOTUS5PB is a stereo loudspeaker kit including an active and a passive cabinet. eMOTUS5PB performs BT connection, balanced and unbalanced audio inputs. Moreover, it includes an IR remote control and 0-10VDC remote port for volume control. A professional and compact loudspeaker stereo kit, a user-friendly and cost-effective formula with a fantastic performance and a unique design that will easily fit in a massive number of multimedia applications: education classrooms, corporate meeting rooms, retail stores, etc. Available in black and white colour.

KEY FEATURES

- Stereo kit: 2x25W RMS
- 2-ways: 5” woofer + 1 “ tweeter
- 2 analogue audio inputs (balanced- Euroblock and unbalanced- RCA)
- BT connection with priority (selectable)
- Sound source selection
- 2-band tone control
- Stereo/mono switch
- Remote port (RJ-45) for volume control (WPmVOL compatible)
- Auto stand-by
- Includes remote control, wall bracket and security steel cable
- Available in black and white finish

APPLICATIONS

- Classrooms
- Meeting rooms
- Multimedia presentations (in combination with video projectors, screens, etc.)
- Retail shops
- Museums and exhibitions
- Hotel rooms

ACCESSORIES AND COMPATIBLE PRODUCTS

- WPmVOL

WPmVOL

MECHANICAL DIAGRAMS

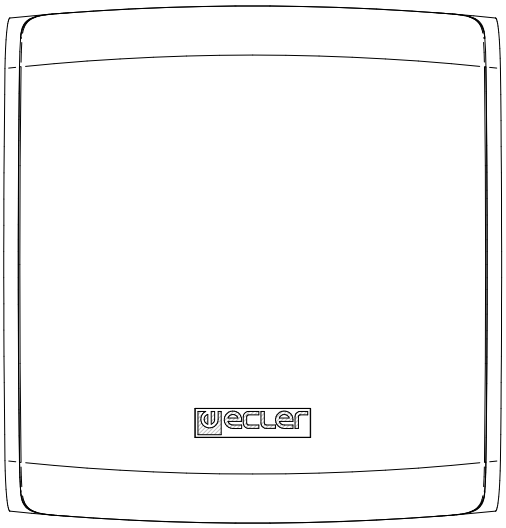

FRONT

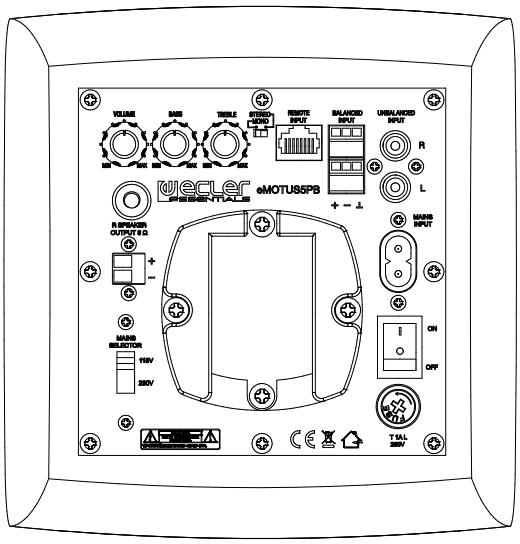

REAR

WALL SUPPORT MOUNTING DIAGRAM

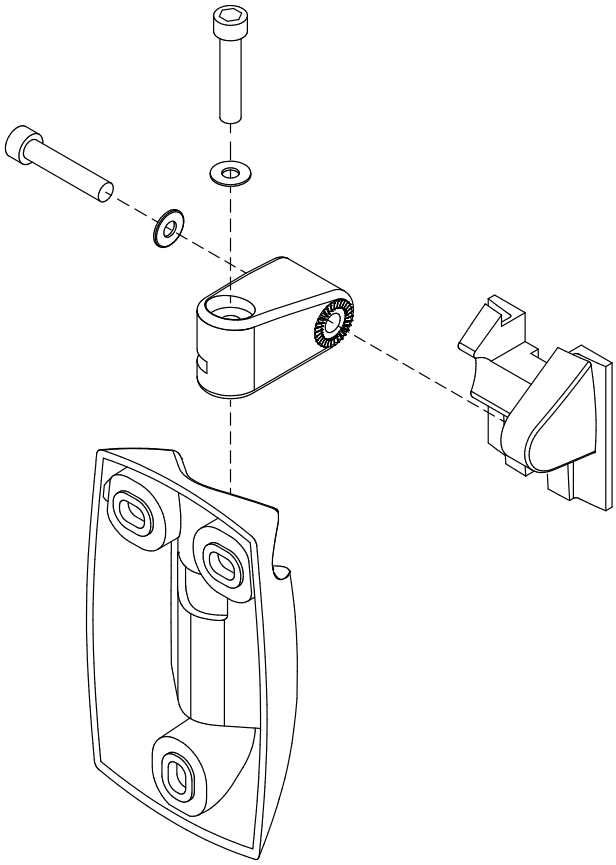

POLAR DIAGRAMS

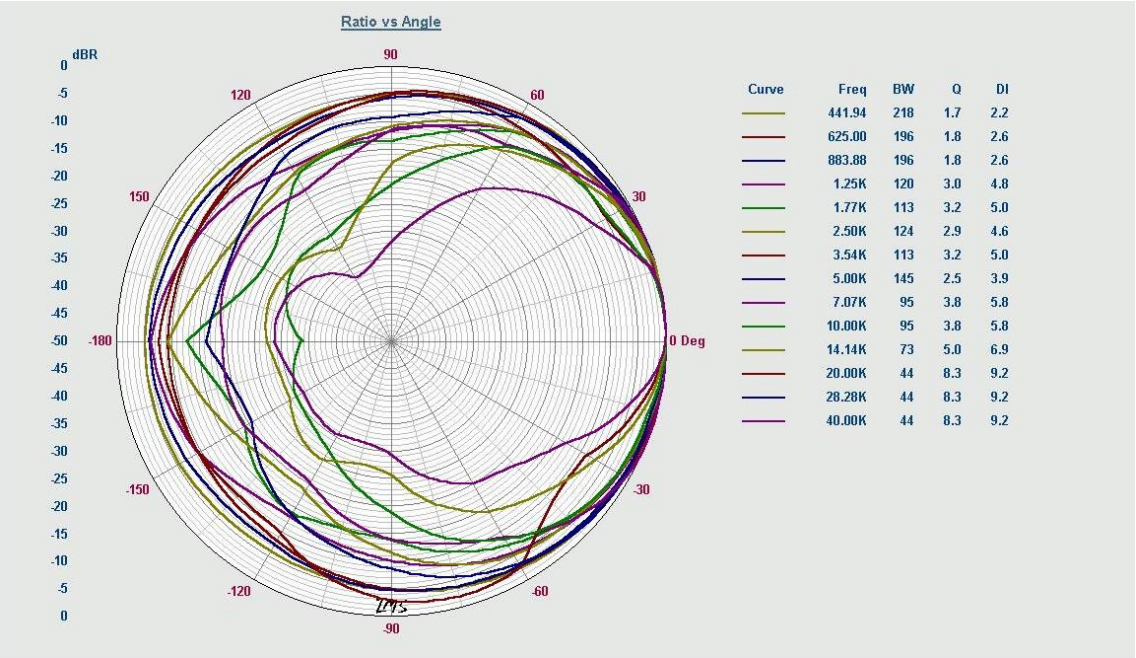

FREQUENCY RESPONSE

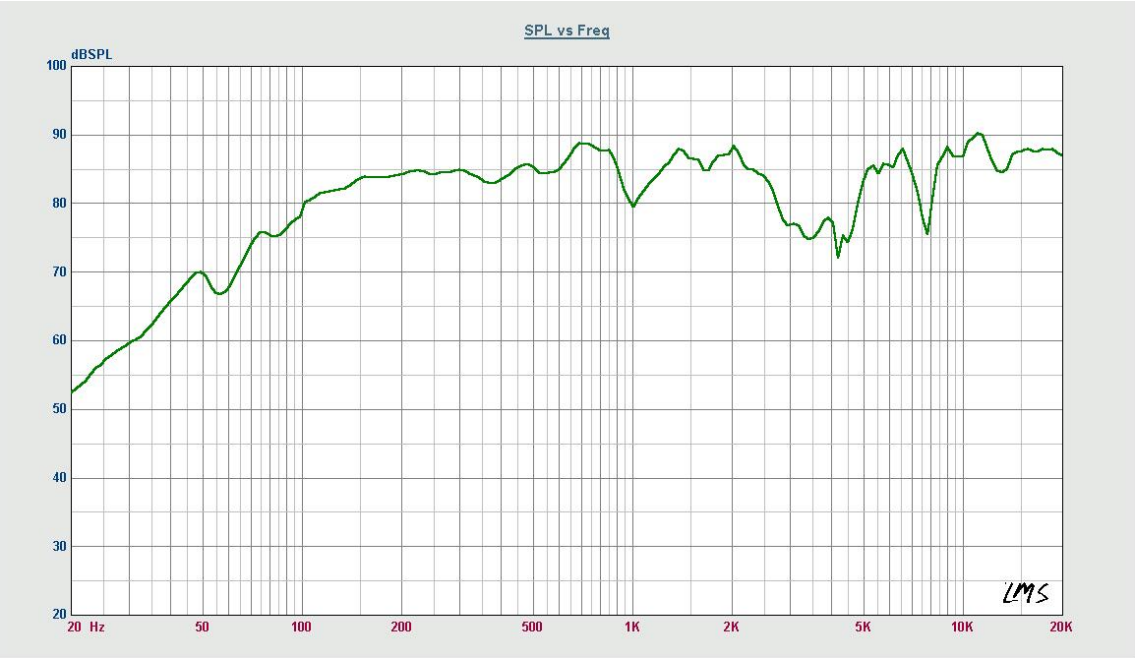

TECHNICAL DATA

eMOTUS5PB	
Power	2 x 25W RMS
Impedance	8 Ω
Frequency response (±10dB)	85Hz – 20kHz
Maximum SPL (dB@1m)	91dB
THD + Noise @ 1kHz Full PWR	≤0.5%
Inputs sensitivity nom/impedance	525mV/22k Ω
CMRR - Line Bal	≥80dB
Tone control response	±14dB
Mains voltage	115 / 230VAC (selectable)
Power consumption (pink noise, 1/8 power @ 8ohm)	≤10.5W
Power consumption (pink noise, 1/3 power @ 8ohm)	≤23W
Power consumption Standby	≤3W
Construction	Aluminum grill, ABS cabinet
Dimensions (WxDxH)	173x185x180mm - Not including brackets; 173x248x180mm - Including brackets
Weight	4.8 kg – Not including accessories; 5.3 kg – Including accessories
BT module	
	BT 4.0 Compliant
	Class II Range up to 10 Meters
	Supported BT Profiles: A2DP v1.2, AVRCP v1.4, HFP v1.6, HSP v1.2
	aptX, SBC, MP3 and AAC decoder support
Remote Control	
fosc	455 kHz
Carrier frequency	38 kHz NEC format
Battery	Lithium Cell CR2025 3V

All product characteristics are subject to variation due to production tolerances. NEEC AUDIO BARCELONA S.L. reserves the right to make changes or improvements in the design or manufacturing that may affect these product specifications.
Motors, 166-168 08038 Barcelona - Spain - (+34) 932238403 information@ecler.es **www.ecler.com**