eMOTUS5OD

SURFACE MOUNT CABINETS

Outdoor Loudspeaker

PRODUCT OVERVIEW

eMOTUS5OD is a 5" loudspeaker cabinet ready for outdoor installation. A professional and compact loudspeaker, cost-effective and with a unique design that will easily fit in a massive number of applications: theme parks, gardens, nature parks and urban spaces, leisure, health and sport centres, residential buildings, outdoor areas, etc. Available in black and white colour.

KEY FEATURES

- 2-way cabinet, 5" woofer and 1" tweeter
- 40WRMS @ 8Ω
- Power selector: 3,75 / 7,5/ 15 / 30W @ 100V & 8Ω position
  15 / 7.5 / 3.75 /1,8W @ 70V & 8Ω position
- Outdoor design
- IP65 rated
- Back rubber cover for connections
- Includes wall bracket and security steel cable
- Available in black and white colour

APPLICATIONS

- Theme parks
- Gardens, nature parks and urban spaces
- Leisure centers
- Health and sport centers
- Museums
- Residential buildings, outdoor areas

TECHNICAL DATA

eMOTUS5OD	
Power	40 WRMS / 80 W Program
Impedance	8 Ω
Power selector	30W / 15W / 7.5W / 3.75W @ 100V & 8Ω 15W / 7.5W / 3.75W /1,8W @ 70V & 8Ω
Frequency response (±10dB)	85Hz – 20kHz
Sensitivity 1W/1m	88dB
Construction	Aluminum grill, ABS cabinet
Dimensions (WxDxH)	173x181x180mm - Not including brackets; 173x248x180mm - Including brackets
Weight	2,4 kg – Not including accessories; 2,7 kg – Including accessories

MECHANICAL DIAGRAMS

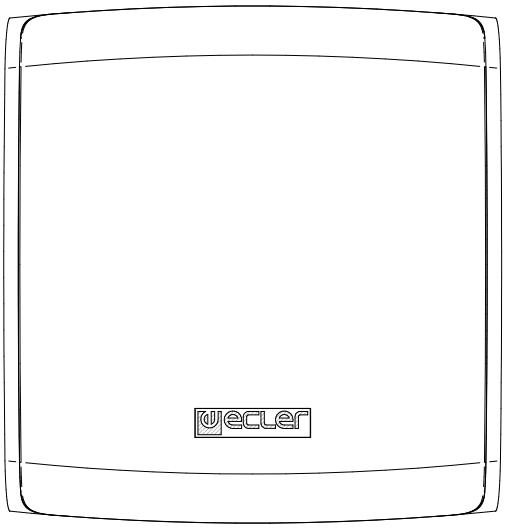

FRONT

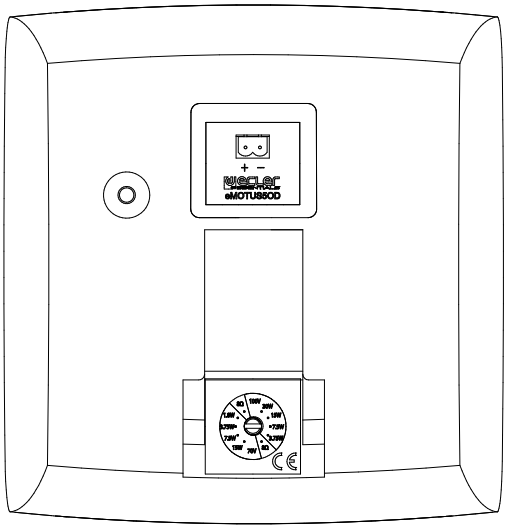

REAR

WALL SUPPORT MOUNTING DIAGRAM

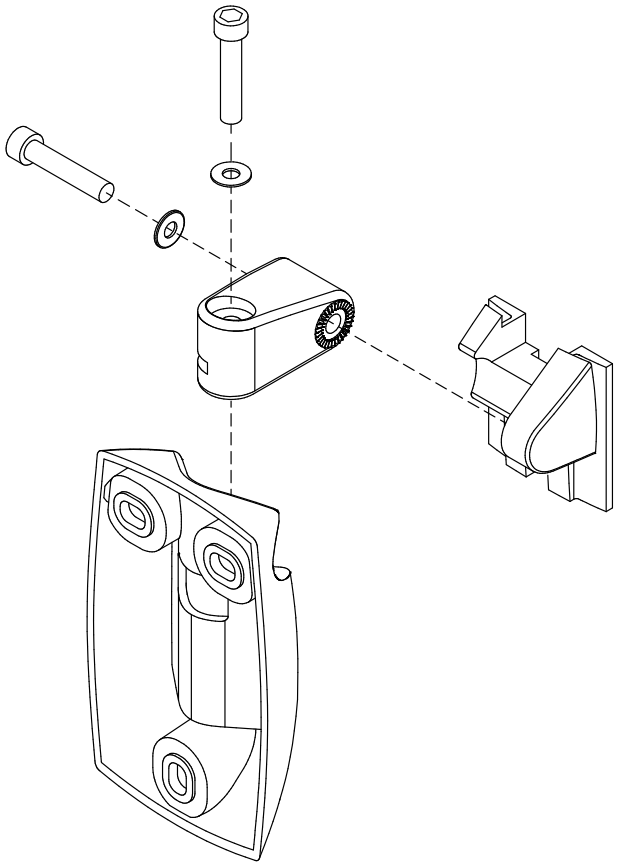

POLAR DIAGRAMS

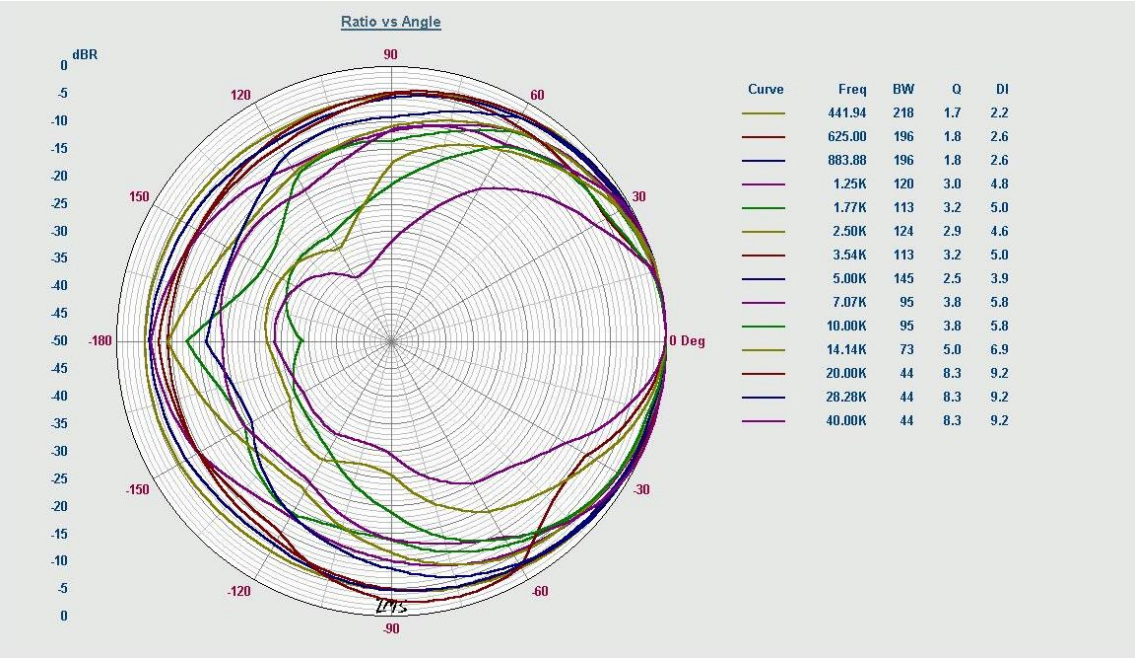

FREQUENCY RESPONSE

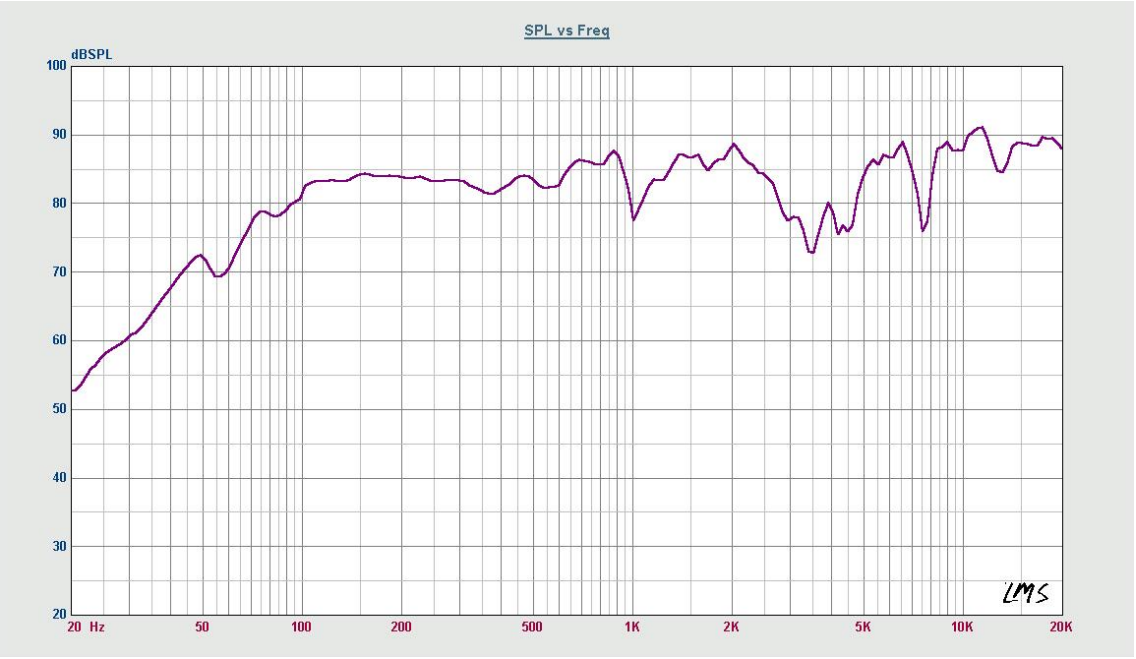

All product characteristics are subject to variation due to production tolerances. NEEC AUDIO BARCELONA S.L. reserves the right to make changes or improvements in the design or manufacturing that may affect these product specifications.
Motors, 166-168 08038 Barcelona - Spain - (+34) 932238403 information@ecler.es **www.ecler.com**