VIC6 / VIC6X

CEILING LOUDSPEAKERS

In-ceiling Loudspeaker w/ Back Can & Tile Bridge

PRODUCT OVERVIEW

VIC6 is an in-ceiling loudspeaker with a great sound performance. It features a 6.5” woofer + 0.5” steerable tweeter, 40WRMS @ 8ohm nominal power and 70/100V line transformer with 40/20/10/5/2,5W power connections. Includes a metallic alloy grill ready to be painted if needed. VIC series provide a careful selection of components in a user-friendly design that seeks speed and versatility of installation on any surface, while maintaining excellent sound quality.

VIC6X shares the same features as VIC6, and includes Back Can and Tile Bridge to provide more flexibility and versatile installation choices.

KEY FEATURES

- 2-way cabinet, 6,5” woofer and 0,5” steerable tweeter
- 40WRMS @ 8Ω
- Power selector: 40 / 20 / 10 / 5 / 2,5W @ 70V
  40 / 20 / 10 / 5W @ 100V
  8Ω position
- Sensitivity (1W/1m): 89 dB SPL
- Metallic alloy paintable grill
- Diameter: 232mm
- Depth: 105mm (VIC6) ; 170mm (VIC6X)
- Colour: White, RAL9010
- Back can (only VIC6X)
- Tile bridge (only VIC6X)

APPLICATIONS

- Corporate and residential buildings
- Commercial premises
- Leisure centres
- Health and sport centres
- Auditorium, museums
- Meeting and conference rooms

ACCESSORIES AND COMPATIBLE DEVICES

- VIC8/VIC8X & VICSB8/VICSB8X
- AVICSG
- AVICCAN6L

TECHNICAL SPECIFICATIONS

VIC6 / VIC6X	
Impedance	8Ω
RMS power	40W
Power options	100V: 40W / 20W / 10W / 5W 70V: 40W / 20W / 10W / 5W / 2,5W
Sensitivity 1W/1m	89dB
Dimensions (ØxD)	VIC6: 232x105mm / 9.1”x4.1” VIC6X: 232x170mm / 9.1”x6.7”
Weight	VIC6: 1.8kg / 3.9 lb. VIC6X: 2.3kg / 5 lb.

POLAR DIAGRAMS

VIC6

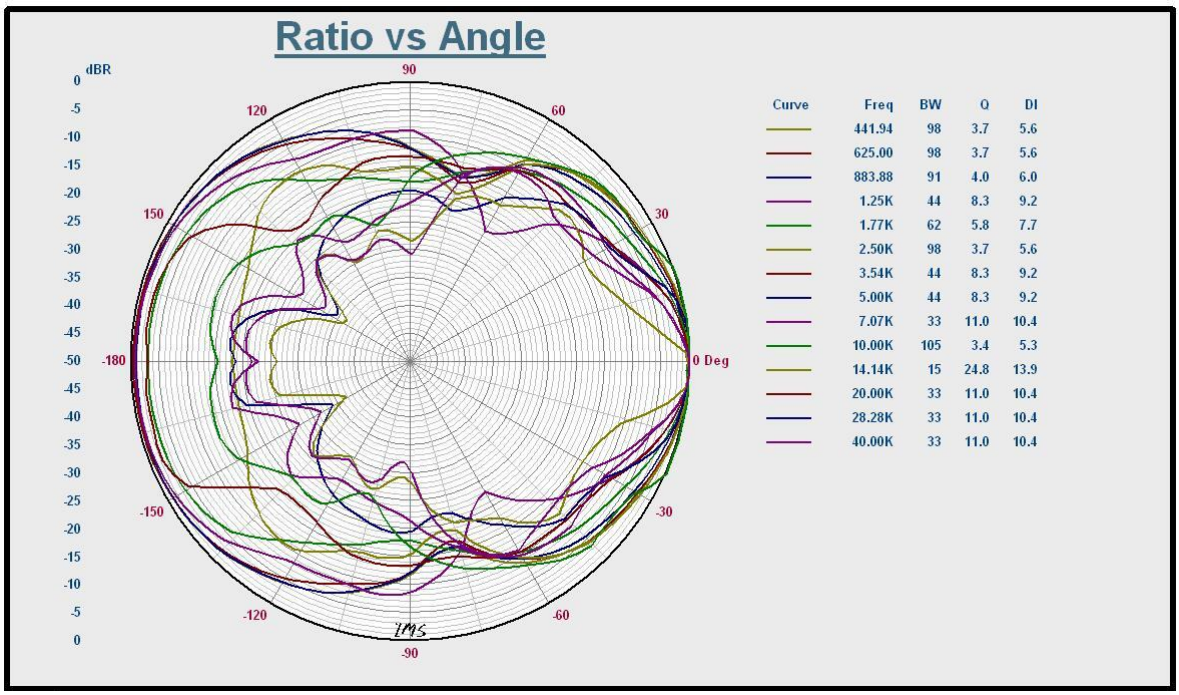

VIC6X

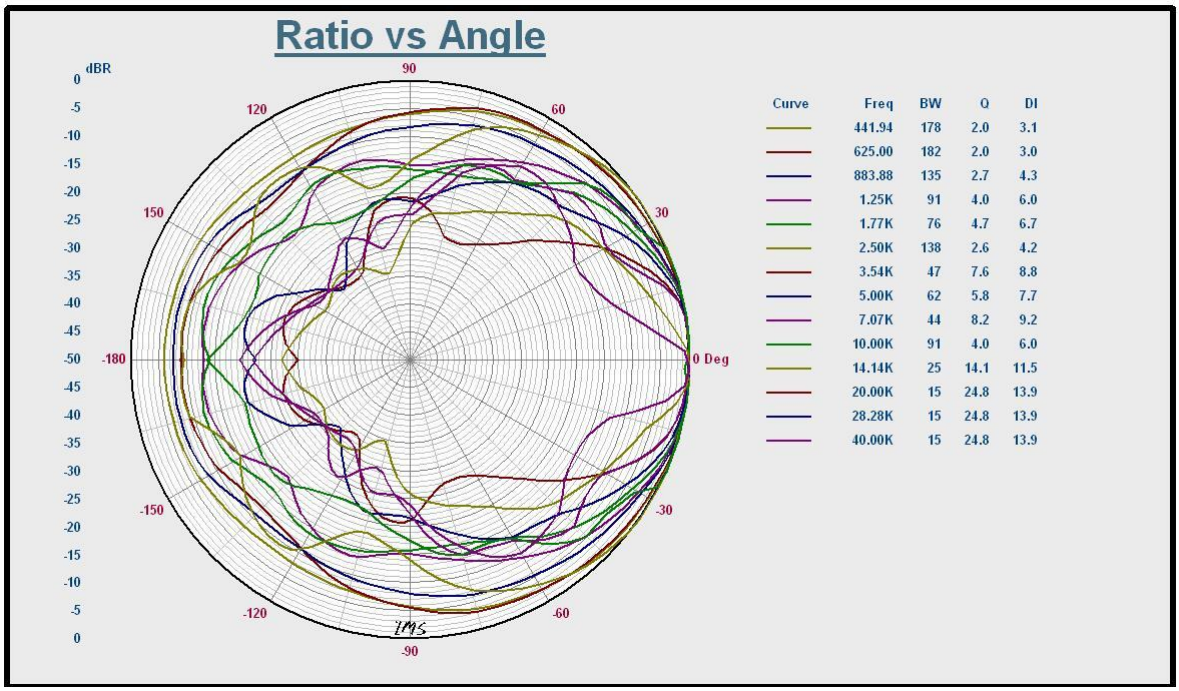

FREQUENCY RESPONSE

VIC6

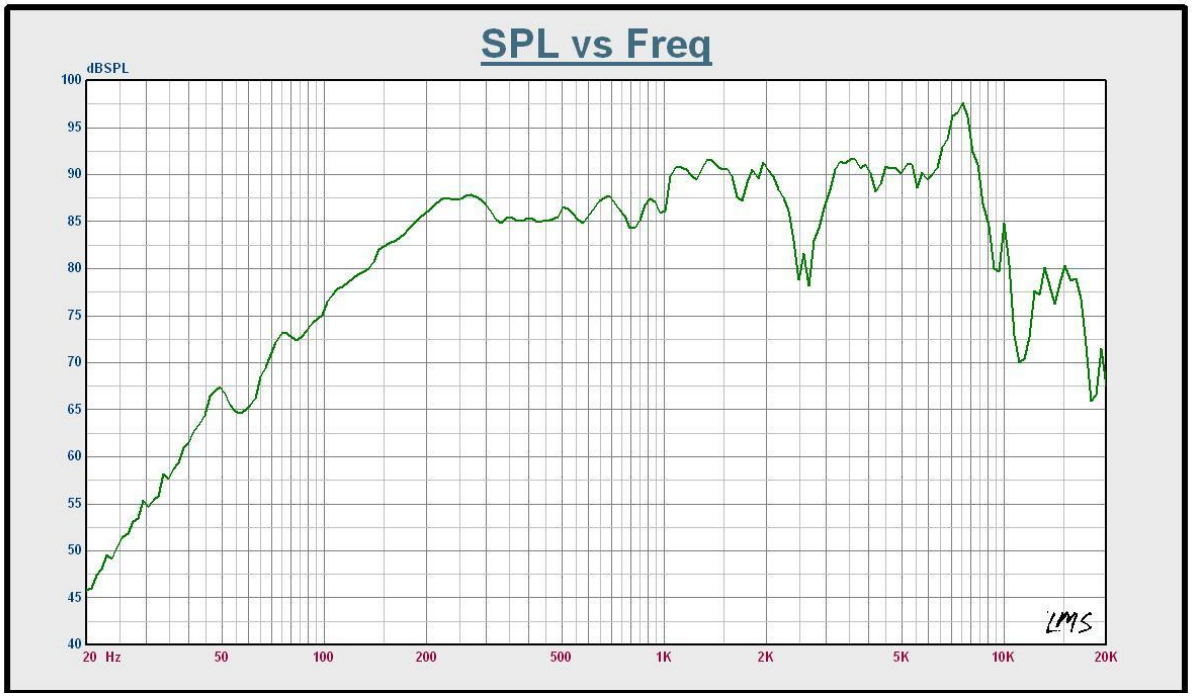

VIC6X

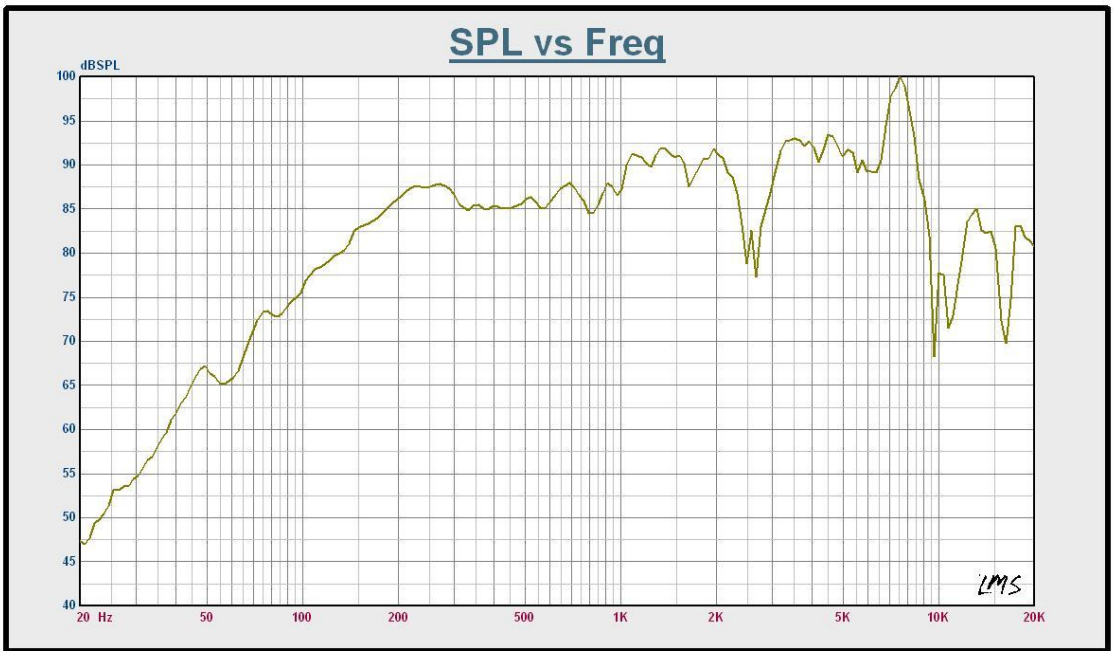

MECHANICAL DIAGRAMS

Front & grill view:

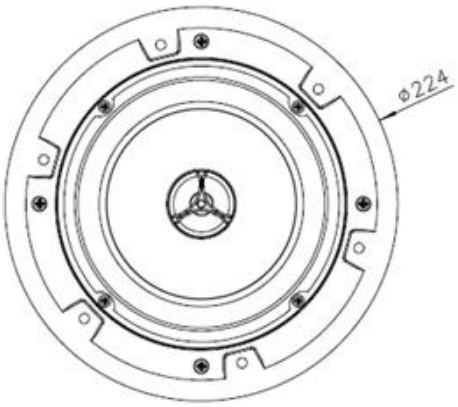

VIC6 lat & rear view:

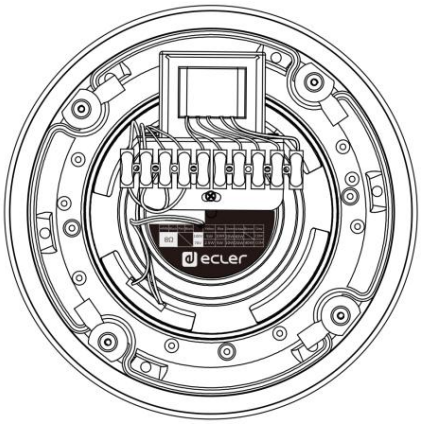

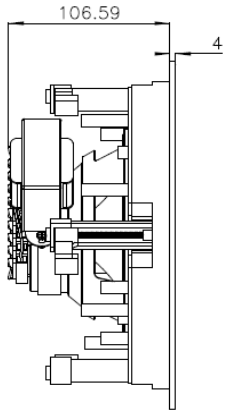

VIC6X lat & rear view:

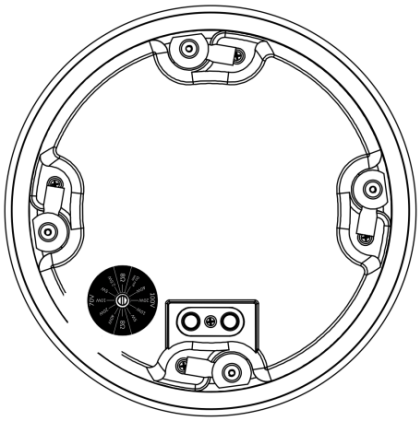

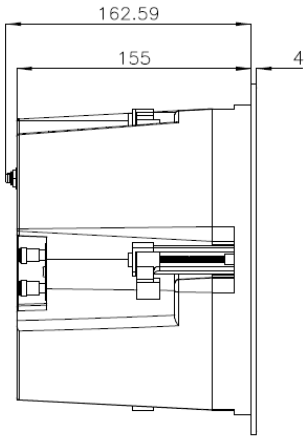

MOUNTING DIAGRAM

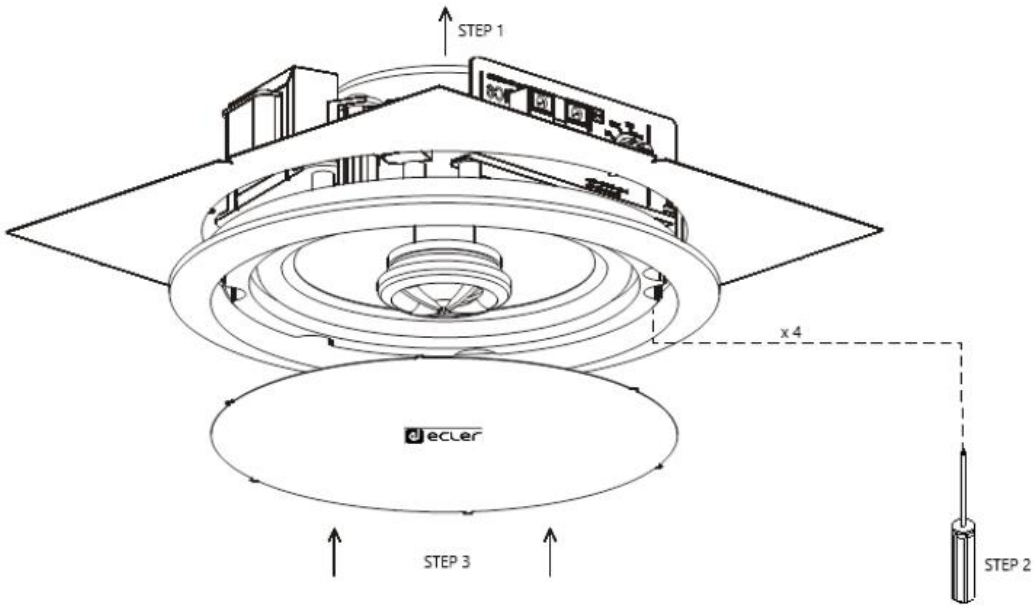

All product characteristics are subject to variation due to production tolerances. **NEEC AUDIO BARCELONA S.L.** reserves the right to make changes or improvements in the design or manufacturing that may affect these product specifications.

Motors, 166-168 08038 Barcelona - Spain - (+34) 932238403 | information@ecler.com | www.ecler.com